SC & TC SERIES DYNAMIC BRAKING OPTION (For Use with External Resistors)

INSTALLATION AND OPERATION INSTRUCTIONS

(These instructions apply to Dynamic Braking modules 845-200, 845-400, and 845-500 ONLY)

The SC & TC Series Dynamic Braking option can be used with all SCD, SCL, SCM, and TCF models, and SCF models with parameter version 306 or higher. The parameter version is displayed momentarily when power is applied, and also appears on a label on the heatsink (For example: PV312).

⚠ WARNING!

Remove power from the drive and wait three minutes before wiring the DB module. Incorrect wiring of the B+ and B- terminals **will result in equipment damage!** The B+ terminal on the DB module must be connected to the B+ terminal on the drive, and the B- terminal on the DB module must be connected to the B- terminal on the drive.

SCD & SCF SERIES DRIVES

PROGRAMMING:

1. Set Parameter 09 (TB-31 OUTPUT) to DYNAMIC BRAKING (04).

WIRING:

The diagram to the right illustrates how the DB module is wired to the SCD & SCF Series drive.

See important wiring NOTES below.

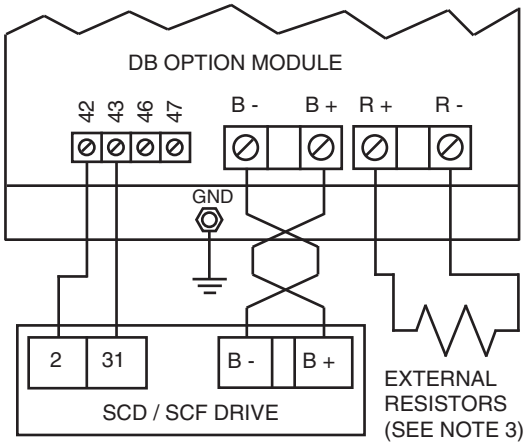

SCL & SCM SERIES DRIVES

PROGRAMMING

1. Set Parameter 12 (TB-13E FUNCTION) to DYNAMIC BRAKING (20).

WIRING

The diagram to the right illustrates how the DB module is wired to the SCL and SCM Series drive.

See important wiring NOTES below.

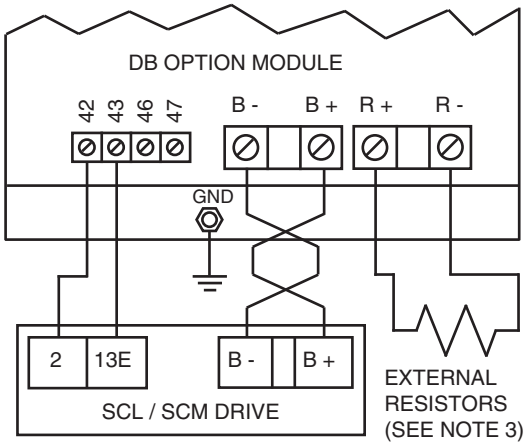

NOTE 1: Use 18 AWG wire for control connections. Tighten DB module and drive control terminals to a torque of 2 lb-in (0.2 Nm). Overtorque of terminals can result in damage.

NOTE 2: Use minimum 14 AWG wire for connections to B+, B-, R+, and R-. Tighten the DB module terminals to a torque of 2 lb-in (0.2 Nm), and tighten the drive terminals to 4.5 lb-in (0.5 Nm). The B+ and B- wires MUST be twisted together and must be less than 12 inches long. Twisting the R+ and R- wires is also recommended.

NOTE 3: External resistors (see selection chart on next page) are required when using Dynamic Braking modules 845-200, 845-400, and 845-500. Only AC Tech supplied resistors are approved for use with 845 dynamic braking modules.

TCF SERIES DRIVES

PROGRAMMING

1. Set Parameter 06 (TB-14 OUTPUT) to DB BRAKE (11).

WIRING

The diagram to the right illustrates how the DB module is wired to the TCF drive.

Refer to important wiring NOTES below.

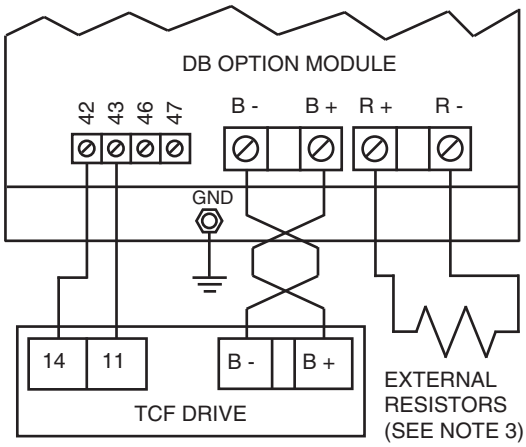

NOTE 1: Use 18 AWG wire for control connections. Tighten DB module and drive control terminals to a torque of 2 lb-in (0.2 Nm). Overtorque of terminals can result in damage.

NOTE 2: Use minimum 14 AWG wire for connections to B+, B-, R+, and R-. Tighten the DB module terminals to a torque of 2 lb-in (0.2 Nm), and tighten the drive terminals to 4.5 lb-in (0.5 Nm). The B+ and B- wires MUST be twisted together and must be less than 12 inches long. Twisting the R+ and R- wires is also recommended.

NOTE 3: External resistors (see selection chart below) are required when using Dynamic Braking modules 845-200, 845-400, and 845-500. Only AC Tech supplied resistors are approved for use with 845 dynamic braking modules.

MOUNTING THE DYNAMIC BRAKING MODULE

The diagram to the right illustrates how to mount the DB Module. The DB Module is compatible with the DIN Rail Mounting Kit option, or can simply be mounted to a flat surface such as an electrical panel.

NOTE: DO NOT mount the resistors below the drive! The resistors generate heat, and must be mounted above or to the side of the drive.

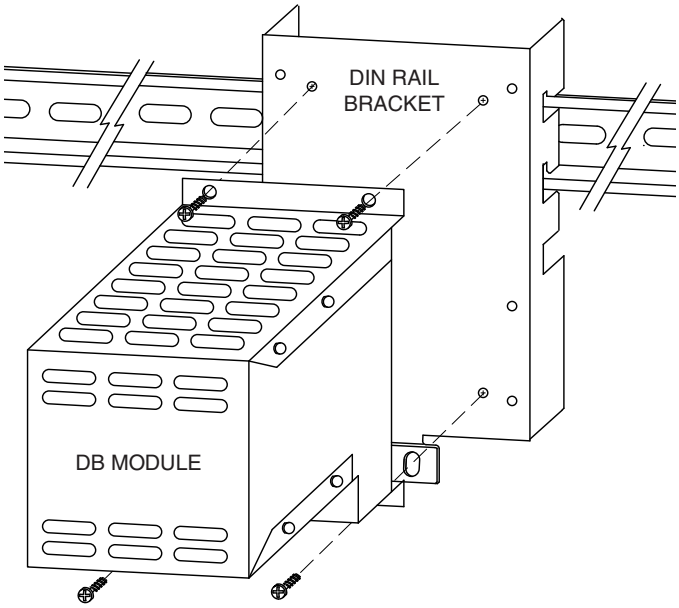

SELECTING EXTERNAL RESISTORS

Use the chart below to select the proper external resistor assembly:

EXTERNAL RESISTER ASSEMBLIES			
HP	**240/200 Vac**	**480/400 Vac**	**590/480 Vac**
0.25 - 0.5	841-001	841-002	N/A
1 - 1.5	841-002	841-002	841-001
2	841-003	841-003	841-002
3	841-005	841-005	841-004
5	841-006	841-006	841-005
7.5 - 10	841-007	841-007	841-008
15 - 20	841-009	841-009	841-010
25 - 30	N/A	841-011	841-012

NOTE: These resistor assemblies are the same as those used with the MC Series drives. The DB Module does not include short-circuit protection for the external resistors. If short-circuit protection is desired, fusing must be supplied by the customer. Consult AC Tech.

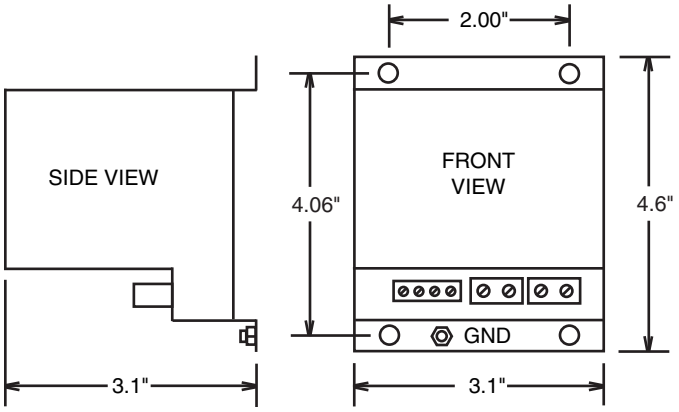

⚠ WARNING!

Hazard of electric shock! External resistors are connected to the drive's DC bus, which can reach 950 VDC. Connections to external resistors must be electrically insulated and mechanically shielded for safety. High Voltage warning signs are also recommended.