Altech Corp.®

40Amp UPS

PS-UPS40

■ Features :

- Battery controller for DIN Rail UPS system
- Parallel connection to DC BUS
- Suitable for 24V system up to 40A
- Installed on DIN Rail TS35 / 7.5 or 15
- Built-in battery test function
- Battery polarity protection
- Relay contact signal output and LED indicator for DC BUS OK, Battery OK, and Battery Discharge
- Cooling by free air convection
- 3 years warranty

CE

SPECIFICATION

MODEL		PS-UPS40
DC INPUT / DC BUS	DC VOLTAGE	24 ~ 29V
	RATED CURRENT	40A
BATTERY INPUT / OUTPUT	VOLTAGE RANGE	21 ~ 29V
	CURRENT RANGE	0 ~ 40A
	CHARGE CURRENT (Typ.)	2A
	EXTERNAL BATTERY (Typ.)	4 / 7 / 12AH / 24V
FUNCTION	RELAY CONTACT RATING (max.)	30VDC, 1A
	DC BUS OK	Relay contact : Short when DC voltage between 21~29V(±3%), relay contacts ; Green LED on front panel
		LED(Green) : DC BUS OK : light, DC BUS fail : dark
	BATTERY FAIL Note.2	Relay contact : Short when battery failure is observed through the battery test function, relay contacts ; Red LED on front panel
		LED(Green) : DC BUS OK : light, DC BUS fail : dark
	BATTERY DISCHARGE	Relay contact : Short when battery in discharge condition, relay contacts ; Yellow LED on front panel
		LED(Green) : DC BUS OK : light, DC BUS fail : dark
ENVIRONMENT	WORKING TEMP.	-20 ~ +70℃
	WORKING HUMIDITY	20 ~ 90% RH
	STORAGE TEMP., HUMIDITY	-20 ~ +85℃, 10 ~ 95% RH
	VIBRATION	Component : 10 ~ 500Hz, 2G 10min./1cycle, 60min. each X, Y, Z axes ; Mounting : Compliance to IEC600068-2-6
SAFETY & EMC	WITHSTAND VOLTAGE	Terminal-Chassis :0.5KVAC, Relay Contacts-Terminal :0.5KVAC
	ISOLATION RESISTANCE	Terminal-Chassis :>100M Ohms/500VDC 25℃ 70%RH
	EMI CONDUCTION & RADIATION	Compliance to EN55022 (CISPR22) Class B
	EMS IMMUNITY	Compliance to EN61000-4-2,3,4,5,6,8, ENV50204, Heavy industry level, criteria A
OTHERS	MTBF	161.9Khrs min. MIL-HDBK-217F (25℃)
	DIMENSION	55.5*125.2*100mm (W*H*D)
	PACKING	0.55Kg; 20pcs/12Kg/1.1CUFT
NOTE	1. All parameters NOT specially mentioned are measured at rated load and 25℃ of ambient temperature. 2. Every 25 seconds, send out test signal through "Battery Fail" relay contact and LED indicator once the battery is fail.	

35 Royal Road, Flemington, NJ 08822-6000 • (tel.) 908-806-9400 • (fax) 908-806-9490 • www.altechcorp.com

Altech Corp.®

40Amp UPS

PS-UPS40

All dimensions shown in millimeters.
To convert to inches multiply by 0.03937

Mechanical Specification

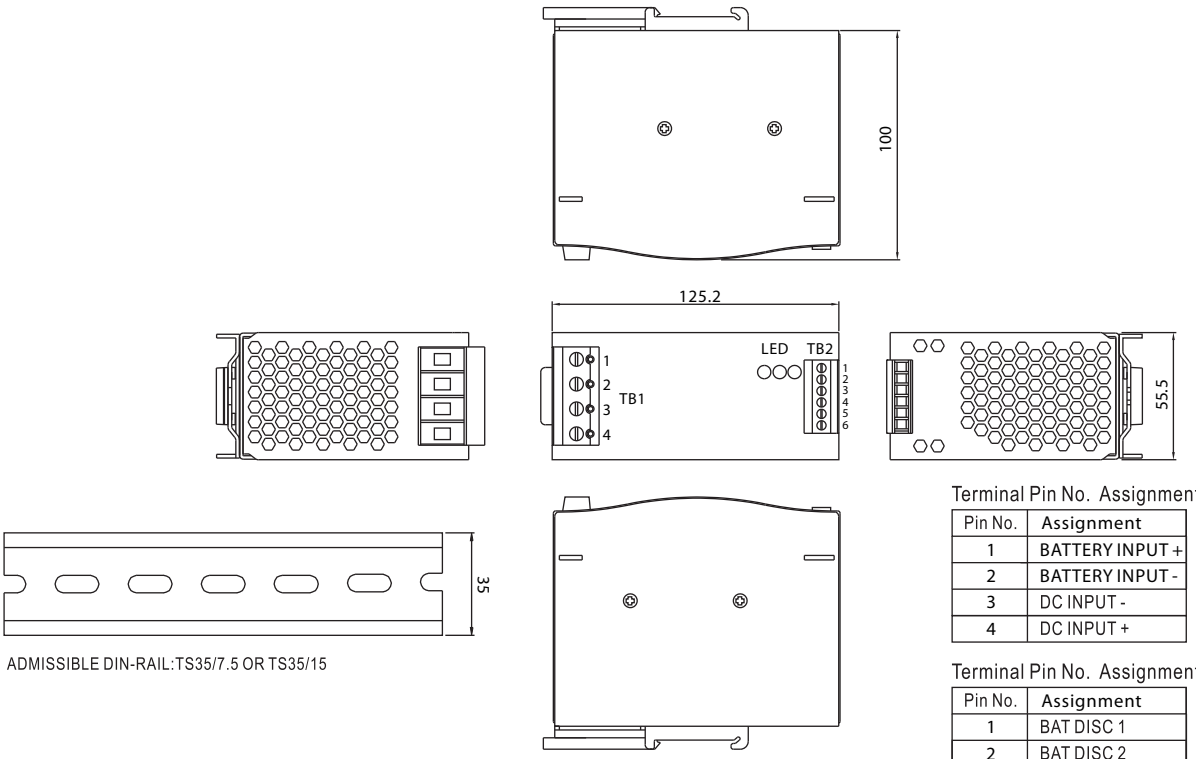

Terminal Pin No. Assignment (TB1)

Pin No.	Assignment
1	BATTERY INPUT +
2	BATTERY INPUT -
3	DC INPUT -
4	DC INPUT +

Terminal Pin No. Assignment (TB2)

Pin No.	Assignment
1	BAT DISC 1
2	BAT DISC 2
3	BAT OK 1
4	BAT OK 2
5	DC OK 1
6	DC OK 2

Block Diagram

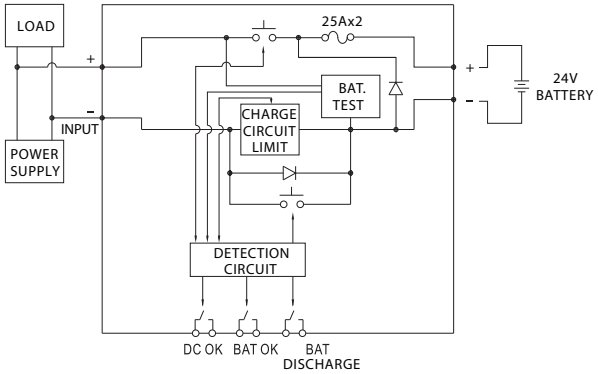

Derating Curve

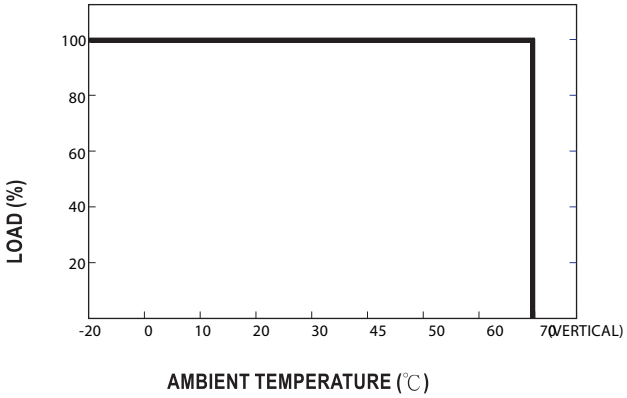

35 Royal Road, Flemington, NJ 08822-6000 • (tel.) 908-806-9400 • (fax) 908-806-9490 • www.altechcorp.com

1.Back up connection for AC interruption

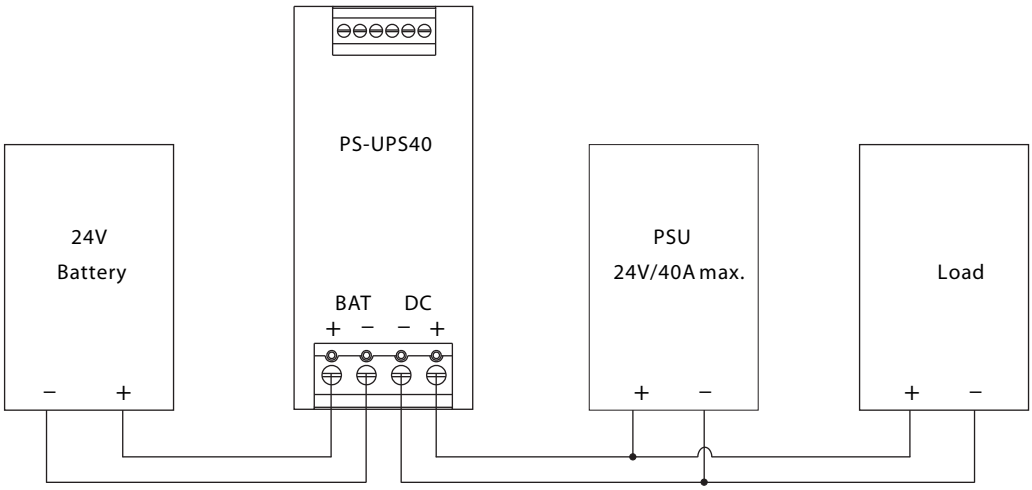
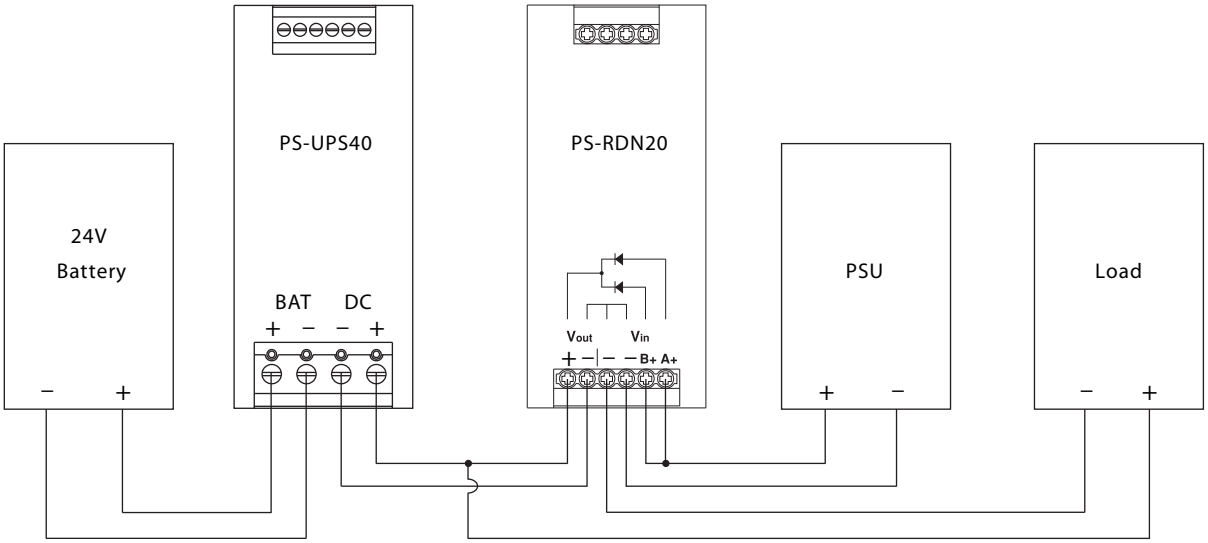
2.Combine redundancy module (PS-RDN20) to back up AC interruption or failure of PSU