Profile guide/actuator – RK DuoLine S 80

Spindle unit RK DuoLine S with trapezoidal thread

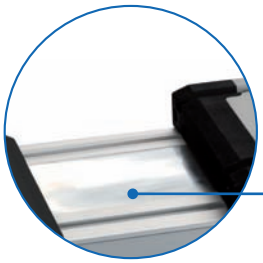

Cover strip
✓ Protection class IP 40

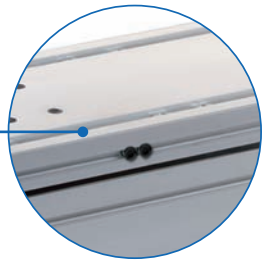

Lubricated for life
✓ up to 30 km runningperformance
✓ reduced maintenance

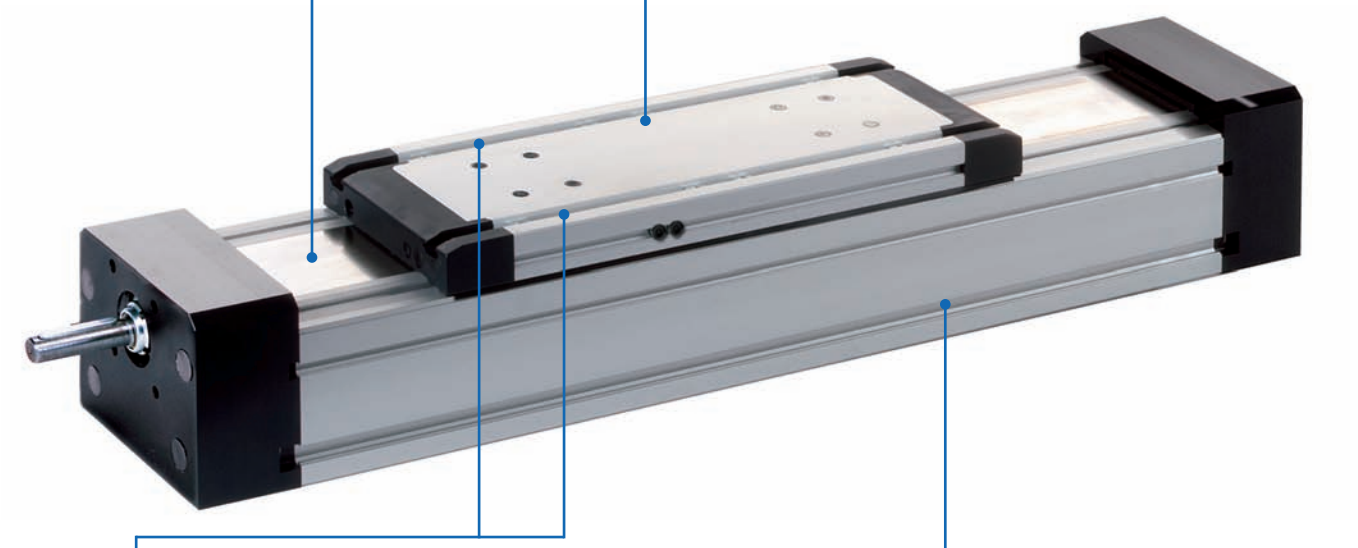

Slot stone bar
✓ Fixes your load securely

Clamping bars
✓ Reliable fixation of the unit

Features:

- Max. travel speed regardless of length
- Lifetime lubricated

RK DuoLine S Protect

- IP 40 protection class due to steel cover strip and seals
- high Positioning accuracy
- Multiple moving screw supports
- Repeatability ± 0,1 mm

RK DuoLine S 80 Protect - Table of contents

Properties/Technical data

- General information/operating conditions ... 248
- Load data ... 249

Versions
(Dimensions, order numbers)

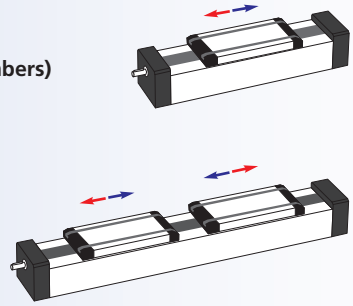

- Righthand thread ... 250 - 251
- Right and lefthand thread ... 252 - 253

Accessories

Fixing
- Fixation of payload ... 254
- Clamping strips ... 254
- Slot stones ... 255

Drive
- Motor adapter ... 255

Position determination
- Limit switch ... 256 - 257

General information / operating conditions

	RK DuoLine S 80
Guidance system	Ball rail system
Installation position	any position
Max. speed	0.02 / 0.04 m/s (regardless of travel)
Max. acceleration	3 m/s²
Repeat accuracy	± 0.1 mm
Positioning accuracy	-
Drive	Trapezoidal thread , Ø20, Pitch 4 or 8 mm, on the right
Pitch accuracy	(± 0.1 / 300 mm)
Duty cycle	S3 30% Basic 1h
Ambient temperature	0 to +60°C
Degree of protection	IP 40

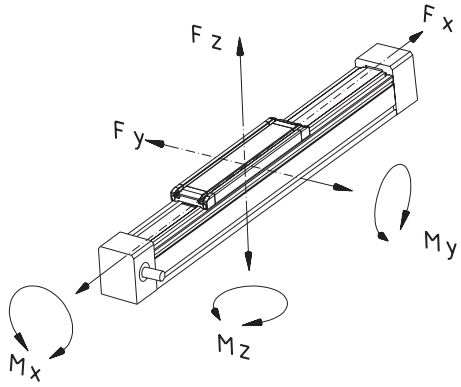

Dynamic load data

F Force [N]

M Torque [Nm]

Spindle drive							
Load data	Spindle	Fx	Fy	Fz	Mx	My	Mz
Standard guide carriages							
RK Duoline S 80	20x4 / 20x8	2500	1000	4100	100	380	350
Extended guide carriage							
RK Duoline S 80	20x4 / 20x8	2500	1000	4100	100	620	550

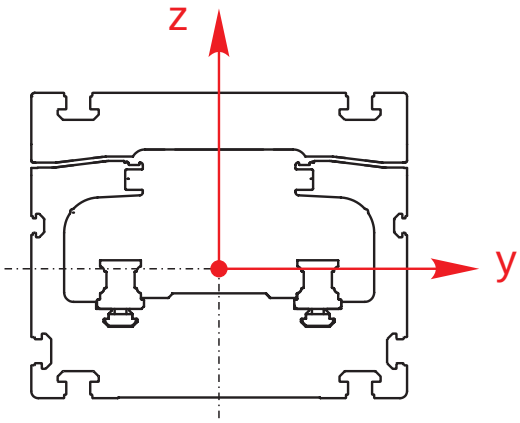

Geometric moment of inertia

[cm^4]

	Iy	Iz
RK DuoLine S 80	116,76 cm^4	165,75 cm^4
RK DuoLine 160	437,70 cm^4	1455,90 cm^4

Order information:

- Second free concurrent carriage on request
- Also available without screw drive as a torque support
- Lubrication over carriages on request

Versions ■ **Righthand thread**

	Code No.	Type	Basic length	B	C	D1	D2
NEW	TD13A2A1A1 _B0_ _ _ _	RK DuoLine S 80 Protect	370	80	100	Ø42^{H7} 2.3 deep	Ø14$_{K7}$
NEW	TD13A2A1B1 _B0_ _ _ _	RK DuoLine S 80 Protect with extended guide carriage	502	80	100	Ø42^{H7} 2.3 deep	Ø14$_{K7}$

Total length (basic length + travel) in mm

Trapezoidal screw :
5 = 20x4
6 = 20x8

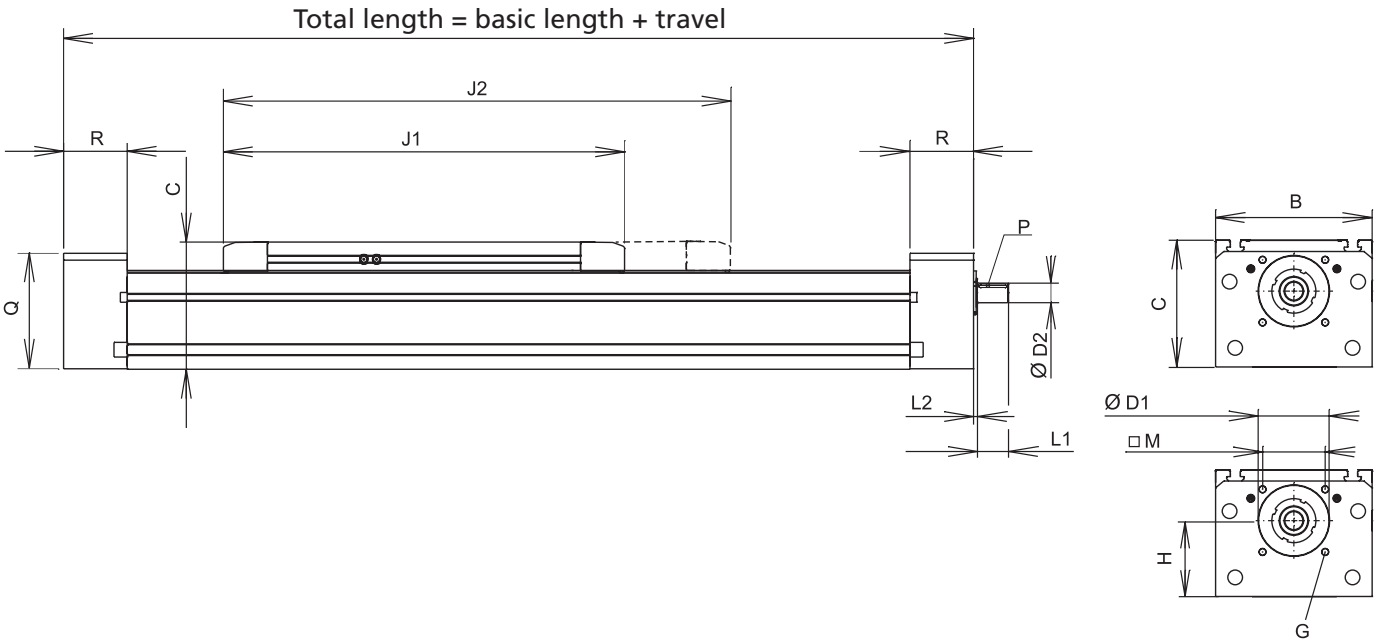

[mm]

G	H	J1	J2	L1	L2	M	P	Q	R	Max. travel	Mass [kg]	
											Basic length	per 100 mm travel
M6-18 deep	57.5	278	-	30	3.8	□46±0.2	5x5x25	89	46	2890	6.74	0.96
M6-18 deep	57.5	-	410	30	3.8	□46±0.2	5x5x25	89	46	2758	8.01	0.96

RK DuoLine S 80 - Versions

Order information:

- Lubrication over carriages on request
- Extended carriages on request

Version ■ **Right-** *and* **lefthand thread**

	Code No.	Type	Basic length	B	C	D1	D2
NEW	TD13A2_1A15B0_	RK DuoLine S 80 Protect	648	80	100	Ø42^{H7} 2.3 deep	Ø14$_{K7}$

Total lenght = basic length + total travel (mm)

E = 1 drive shaft at righthand thread end
G = 1 drive shaft at lefthand thread end

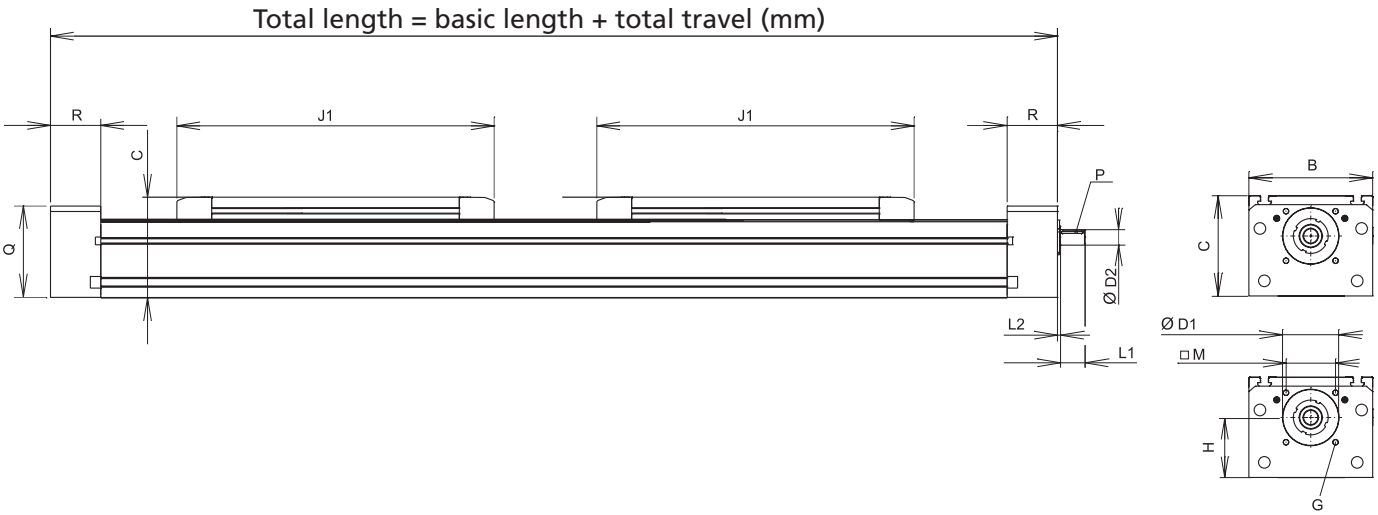

[mm]

G	H	J1	L1	L2	M	P	Q	R	Max. travel	Mass [kg]	
										Basic length	per 100 mm travel
M6-18 deep	57.5	278	30	3.8	□46±0.2	5x5x25	89	46	2890	11.7	0.96

Fixation of payload RK DuoLine S 80

- Two slot stone strips have been inserted in the guide carriage on which fittings can be securely attached in a variety of ways
- Profile slots in the guide carriage and guide profiles facilitate fixation

RK DuoLine S 80

*only with version with extended guide carriage

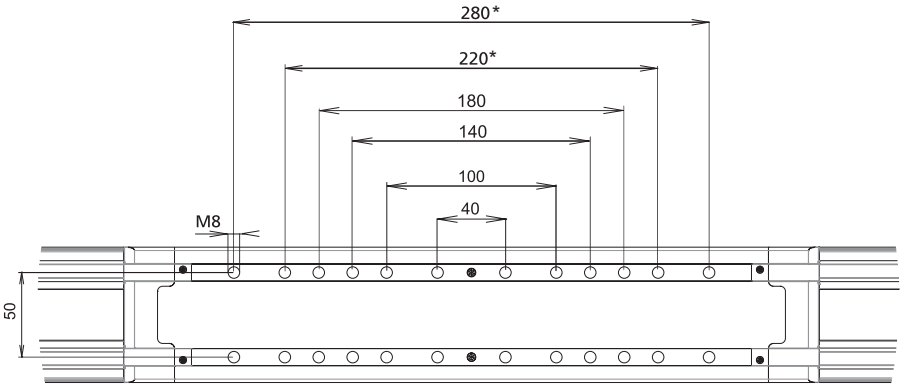

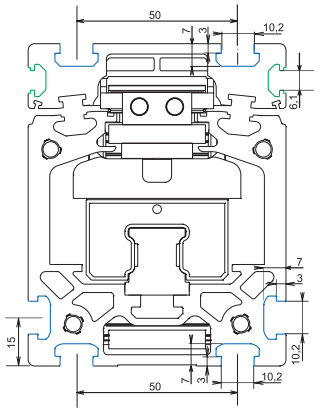

Clamping strips

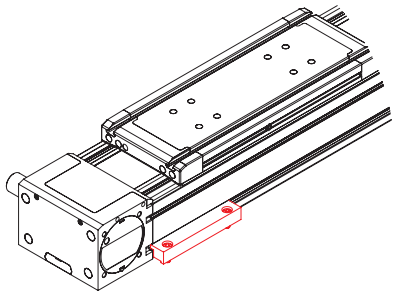

Fig.1: Ground assembly

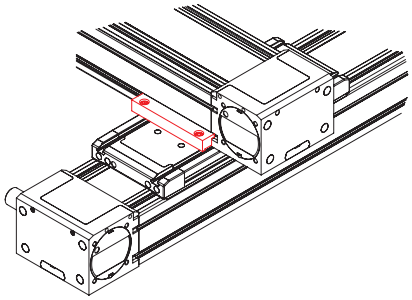

Fig.2: Crossing units

- Clamping strips facilitate fixation of the linear unit to the chassis or two units to a crossing table

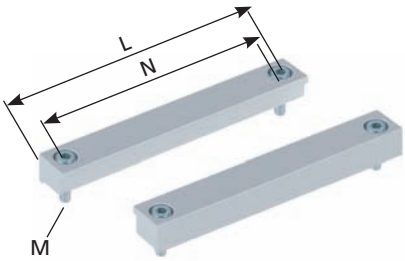

Material:
Natural anodised aluminium, galvanised fixation material.
Scope of delivery:
2 clamping strips with fixation material

[mm]

Code No.	Type	Abb.	L	M	N
91806	RK DuoLine 80 ground assembly	1	76	M8	50
	RK DuoLine 80 crossing to 80	2			

RK ROSE+KRIEGER

Slot stones

- Slot stones can be inserted and positioned at the guide profile and guide carriage

Material: galvanised steel

Slot stone -B-
can be swivelled into the slot

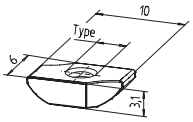

Slot stone -N-
can be slid into the slot

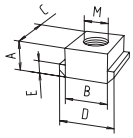

Slot stone -K-
can be swivelled into the slot

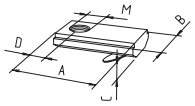

[mm]

Code No.	Type	Slot geome-try	A	B	C	D	E	M8M	F [N]
Slot stone -B-									
E00017CEH	M3	20	Pack of 10 units						
E00058CEH	M4	20	Pack of 10 units						
Slot stone -N-									
4006202	M8	30	5	10	13	13	3	M8	4000
Slot stone -K-									
4006211	M5	30	21	12	4	7	–	M5	5000
4006212	M6	30	21	12	4	7	–	M6	5000

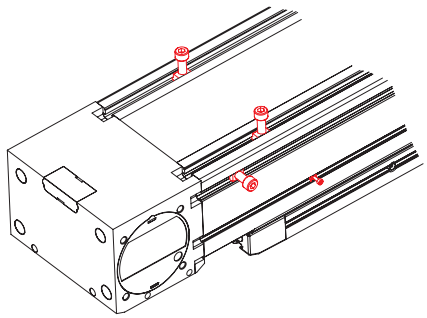

View of DuoLine from below

Motor adapter kit for RK-Motors

- Servomotors from the RK standard range can be easily connected
- Motor adapter kits for every motor or gear unit manufacturer
- Complete motor adapter kits manufactured to your specifications on request

Scope of delivery:
Motor adapter kit, elastomer coupling and fixation material

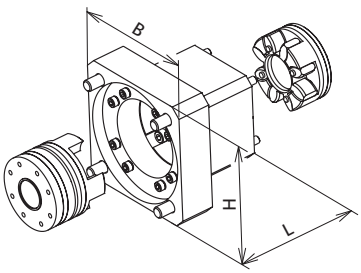

Code No.	Type	Version
Servo motors DuoLine S 80		
949360	RK-AC 112	with gearbox – PLE 60
949361	RK-AC 118	with gearbox – PLN 70
949367	RK-AC 240	without gearbox
949362	RK-AC 240	with gearbox – PLE 90
949364	RK-AC 260	with gearbox – PLE 80
949366	RK-AC 210 / 470	without gearbox
Three phase motors DuoLine S 80		
949363	DSM 90 / 120 W	with gearbox
949365	DSM 180 / 250 W	with gearbox

Mechanical limit switch

- External fixation on the guide profile

Scope of delivery:
Limit switch with set of fixing items

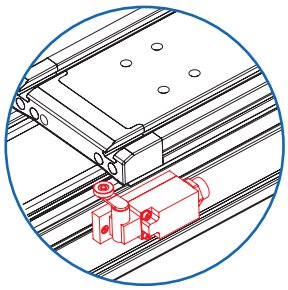

Voltage	max. 230 V AC
Max. switching current	4 A
Max. starting current	10 A
Operating frequency	max. 5000 / h
Mechanical lifetime	$20x10^6$ cycles
Axis leverage adjustment	locking by 360°
Degree of protection	IP67
Ambient temperature	-30°C to +80°C

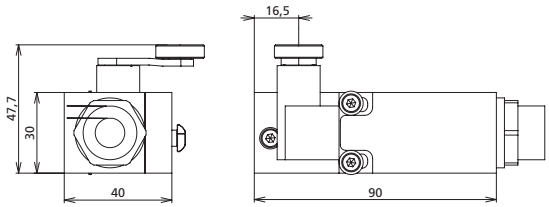

Code No.	Type	Version
91919	RK DuoLine 80	NO / NC, mechanical limit switch

External inductive limit switch

- External fixation on the guide profilev

Scope of delivery:
Limit switch with set of fixing items

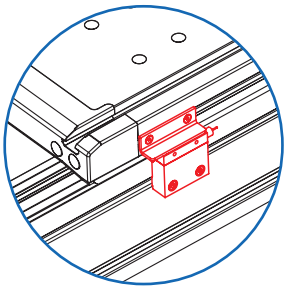

	external	internal
Voltage	10...30 VDC	10...30 VDC
Max. switching current	100 mA	100 mA
Operating frequency	max. 5 kHz	max. 5 kHz
Mechanical lifetime	independent of operating cycles	independent of operating cycles
Operating distance	2 mm	0.8 mm
Degree of protection	IP65	IP67
Cable length	2.5 m	3 m
Ambient temperature	-25°C to +70°C	-25°C to +70°C

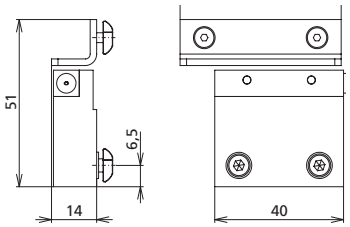

Internal inductive limit switch

- Proximity switch integrated in the guide profile – no protruding contours

Scope of delivery:
Proximity switch with set of fixing items

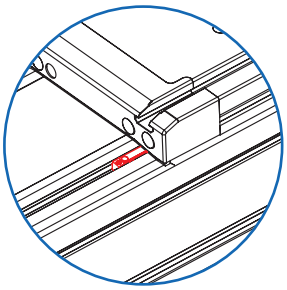

Code No.	Type	Version
92819	RK DuoLine 80	NO, External inductive limit switch
92820*	RK DuoLine 80	NO, Internal inductive limit switch

* Bei diesem Endschalter ist die Nut mit dem untenstehenden Abdeckprofil zu verschließen

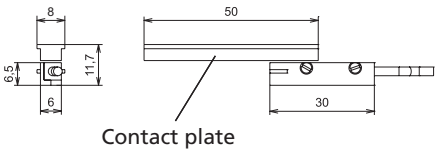

Code No.	Version		
E00024DAA	Cut to size	black	max. 2.000 mm